LOBEPRO

ROTARY PUMPS

Municipal & Industrial Wastewater Treatment

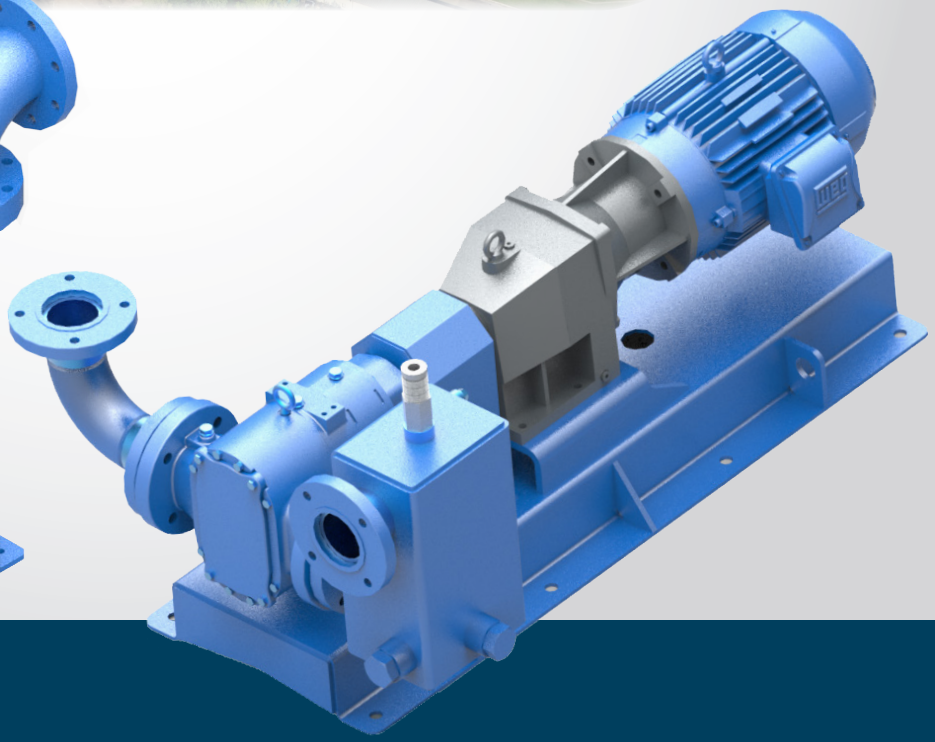

*March 2022

Is a LobePro rotary lobe pump right for you?

1. *Are you pumping sludge, mud, or thick fluids?*
2. *Does the slurry contain corrosive or fine abrasives?*
3. *Does your application require a pulse free or low shear flow?*
4. *Does your application require self-priming suction lift, strong vacuum or low NPSHR?*
5. *Are you pumping froth, DAF or other mixture of air and fluid?*
6. *Do you need a measured flow or constant pressure at different flow rates?*

If you answered yes to just one of the questions, then you could possibly benefit from a LobePro rotary lobe pump. This is not just our opinion. The Hydraulic Institute and most standard texts recommend positive displacement pumps like LobePro when any of the above circumstances apply. As a result, LobePro pumps are widely used at wastewater treatment, power, mining, and chemical plants plus oil exploration and refining and construction dewatering to name a few.

Where to Use a Lobe Pump in a wastewater treatment plant?

The chart is typical of many wastewater treatment plants. However, there are many alternates. Among these are "Membrane Bio Reactors (MBR). Rotary lobe pumps are very well suited to this application because the same pump can run at high speed and low pressure to fill the membrane and then at 1/10 the speed and ten times the pressure to force wastewater through the membranes . This is referred to as 10 to 1 turndown capability . Additionally, our pumps can be run in reverse which permits backwashing the membrane without requiring an additional pump.

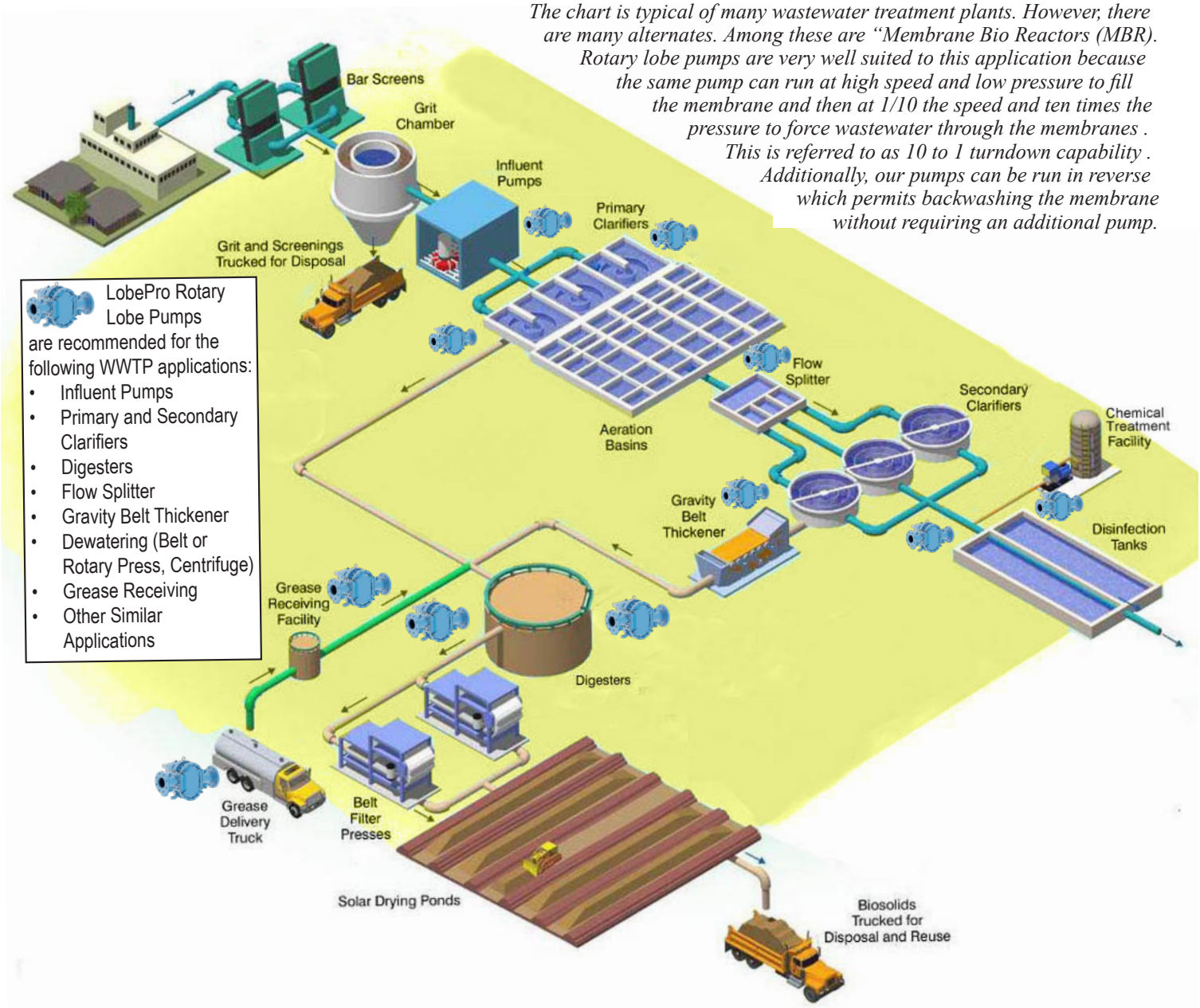

LobePro Rotary Lobe Pumps are recommended for the following WWTP applications:

- Influent Pumps
- Primary and Secondary Clarifiers
- Digesters
- Flow Splitter
- Gravity Belt Thickener
- Dewatering (Belt or Rotary Press, Centrifuge)
- Grease Receiving
- Other Similar Applications

LOBEPRO
ROTARY PUMPS

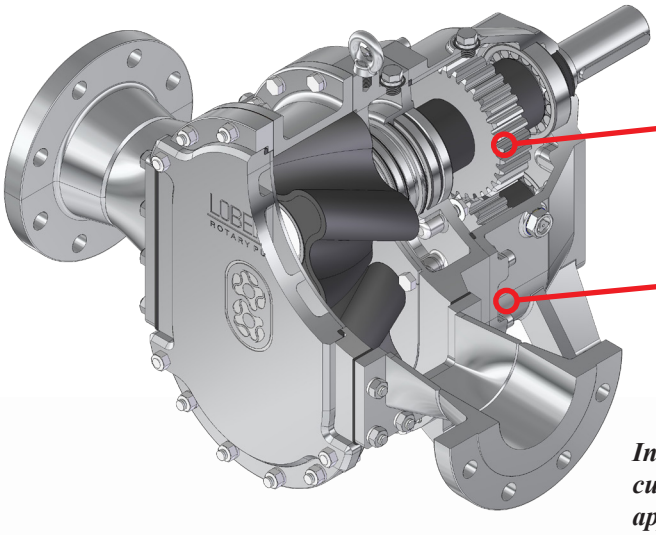

Timing gears pre-set by the factory. No adjustment required.

Seal cooling chamber for limited dry-run protection. No flushing required.

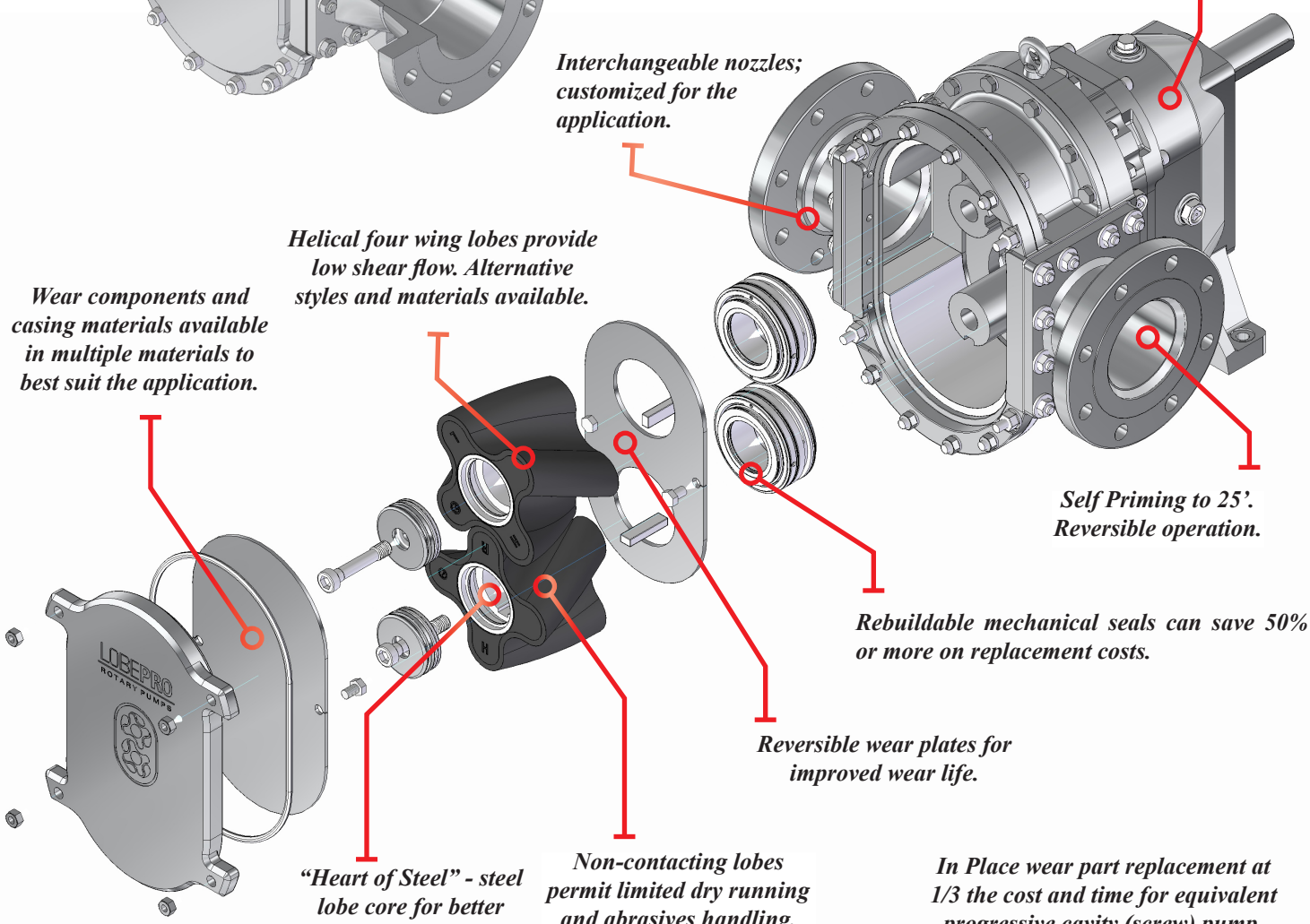

Separate oil chamber for timing gears and bearings.

Interchangeable nozzles; customized for the application.

Helical four wing lobes provide low shear flow. Alternative styles and materials available.

Wear components and casing materials available in multiple materials to best suit the application.

Self Priming to 25'. Reversible operation.

Rebuildable mechanical seals can save 50% or more on replacement costs.

Reversible wear plates for improved wear life.

"Heart of Steel" - steel lobe core for better rubber bonding ability

Non-contacting lobes permit limited dry running and abrasives handling.

In Place wear part replacement at 1/3 the cost and time for equivalent progressive cavity (screw) pump.

OPERATING PRINCIPLE

Processing wastewater sludge is a demanding application typically requiring many pumps. Centrifugal pumps can be and are used successfully in some of these applications. In other applications, a positive displacement (PD) pump will give the Wastewater Treatment Plant (WWTP) operator better results. Naturally, when your pumping applications call for a positive displacement pump, we think our American made LobePro should be your pump of choice.

Ask the Expert: Positive Displacement pump vs Centrifugal pump

The Hydraulic Institute is the USA's most prestigious pump association. Many pump companies, including most major manufacturers of centrifugal pumps, are members. Nevertheless, the Hydraulic Institute recommends using Positive Displacement (PD) pumps rather than Centrifugals in the following application circumstances:

- Fluid Characteristics:
  - High viscosity
  - Variable viscosity
  - Low shear pumping required
  - Solids ladened fluids
  - Multi-phase (gas & fluid)
- Process Conditions:
  - High pressure
  - Low flow
  - Efficiency
  - Combination of high pressure/low flow
  - Self-priming and inlet conditions (low NPSHA)

These circumstances often occur in wastewater treatment plants. For example DAF and scum are multi-phase containing both air and fluid. Primary and thickened sludge are solids ladened with variable viscosity depending not only on temperature but how long they have been at rest. This is true of FOG (Fats, Oil, Grease) sludge also. Floc applications require low shear pumps to avoid breaking up the floc. Having a portable self-priming pump can also be pretty handy around a WWTP for cleaning out clarifiers, digesters, etc.

Why are positive displacement pumps generally recommended for solids laden wastewater? Here is a pretty good explanation.

"Use of centrifugal pumps is restricted in most common cases to relative dilutes (less than 2-3% solids). Centrifugal pumps are not recommended for pumping primary sludge, primary scum or thickened sludge applications. There are two factors that contribute to the failure of standard solids handling pumps in this application:

- First, there is no method to ensure that the thickened solids will be positively drawn to the pump by the pump suction.
- Secondly, the system head curve varies significantly depending on the solids concentration causing variation in the liquid flow rate and in the amount of power required by the centrifugal pump."

(Wastewater Treatment Plant Design by P. Arne Vesilind Chapter 12)

Positive displacement pumps are modestly effected by changes in viscosity, solids % or differential pressure. Centrifugal pump outputs can be drastically effected. Below is a side by side comparison of LobePro vs Centrifugal Pump Curves for pressure.

An increase in Total Dynamic Head (TDH) from 60 TDH to 80 TDH decreases the below centrifugal pump's GPM from 2000 GPM to 1000 gpm. The same change in pressure decreases the rotary lobe pump's output by 22 GPM! Viscosity and solids percentage changes can have similarly drastic effects on the centrifugal's output.

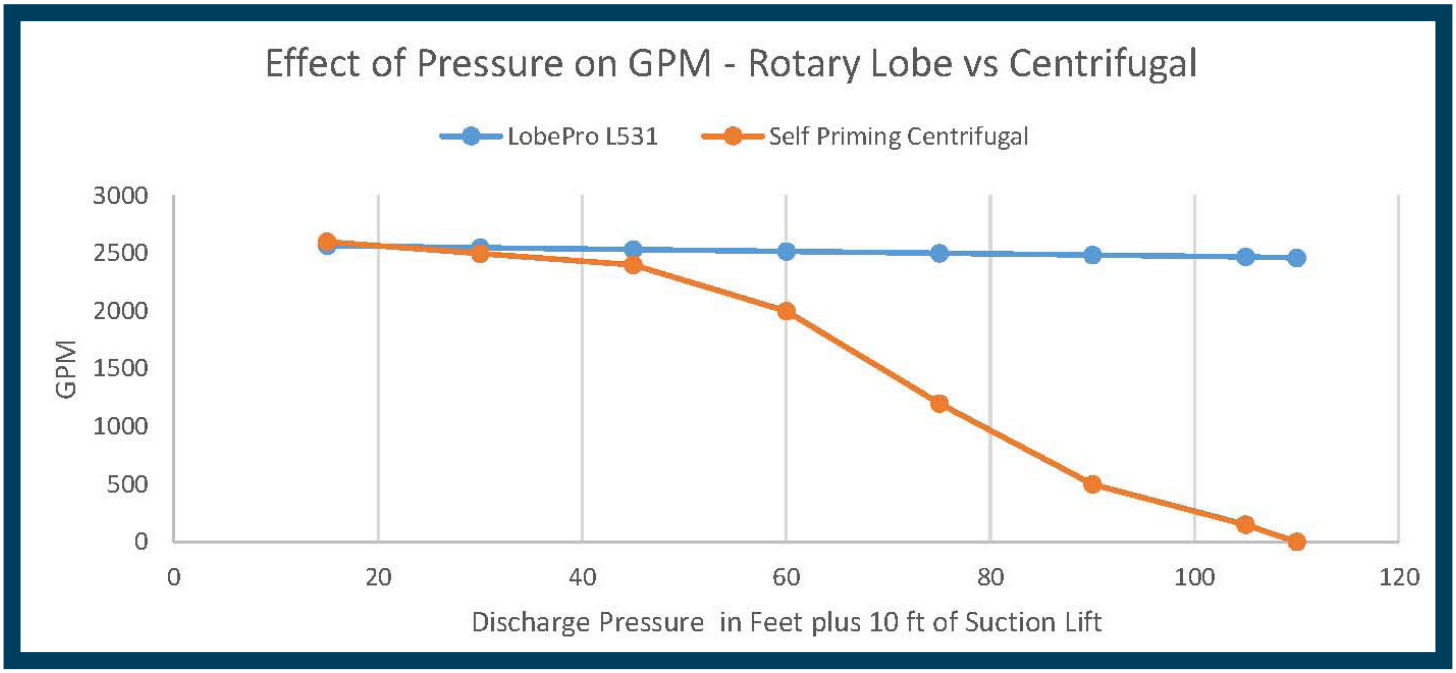




Guide to getting the best from your Rotary Lobe Sludge Pumps

According to an article by Dr. Sludge, a wastewater commentator, 60 % of all users are dissatisfied with their sludge pumps. He attributes this to 1. Buying based on initial cost rather than lowest life cycle cost or 2. Poor communication and understanding of conditions between the user and the manufacturer. In combination, these cause the following problems:

a. **Pumps run too fast.** Most wastewater applications are abrasive. Pump speed affects wear exponentially. Most experienced WWTP managers agree that if speed is doubled, the wear rate is at least tripled. Running at too high a speed in an abrasive application results in excessive parts and labor costs. Because most wastewater wear in a rotary lobe pump is caused by sliding abrasion, the best measure of speed for wear is lobe tip speed. LobePro has a pump sizing program designed to help our users get satisfactory wear part life.

b. **Improper suction or discharge piping.** Suction lines should be kept short, straight and sized to maintain a velocity of 2.5 to 8 ft. per second. This is especially important with sludge containing 3% or greater solids. Such sludge is non-Newtonian and will thicken when sitting and is compressible. These characteristics may result in the pump not receiving liquid on startup if the suction piping is not properly designed. Dry running may cause premature pump failure as a result of failure of the elastomers.

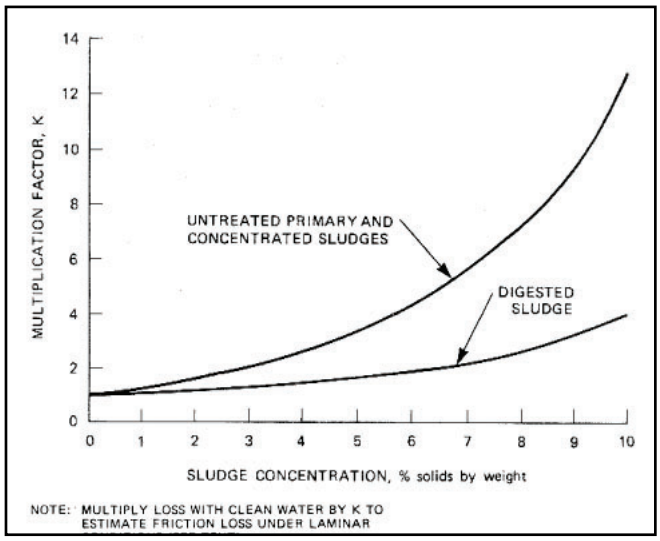

**Curve Copied from EPA Standard 625/1-79-011, Chapter 14, and pg. 14-3*

c. **Inadequate Power.** Total dynamic head (TDH) or PSI calculations should be made in accordance with EPA Standard 625/1-79-011. This is often not done. Of particular concern is pipe friction losses encountered from pumping certain sludges, which can be many times greater than that of water as shown in the chart on left.

Page 14-2 of the EPA standard states the curve (at left) can be used as a rough guideline when:

1. Pipe velocities are between 2.5 feet/sec and 8 ft. /sec.
2. The pipe is not seriously obstructed by grease or other materials.
3. Thixotropic behavior (getting stiffer and harder to start after sitting) is not included in the chart on left. Friction losses may be much higher in suction pipe. Also, when starting a pipeline shut down for over a day, unusually high pressure may be required.

d. **Inadequate control of solids**: Our rotary lobe pumps are designed to pass softer, compressible solids such as feminine hygiene products (tampons), rags, panty hose, and plastic bottles without damage. The maximum soft solids size the pumps will pass is: S frame- ¾"; M frame- 1 ½"; L frame- 3". To obtain good lobe life, hard solids such as grit, significant rags and fiber must be removed in the headworks prior to reaching the pump by either grounding or filtering.

Important Properties of LobePro Rotary Lobe Pumps

- **Low shear**
- **Measured Flow**
- **Self priming to 25' wet (7.5 m)**
- **Discharge pressure to 175 psi (12 bar)**
- **Capacities 0- 2,656 GPM (0-604 m³/hr)**
- **Low pulsation**
- **Forward and reverse pumping operation**
- **Long lifespan**
- **Pump NPSHR is 3' (1 m) or less**
- **Easy access to wet end for "in place" wear part replacement**
- **Space-saving, compact design**
- **Excellent for abrasives, compressible solids & viscous fluids**
- **Low maintenance**
- **Run dry ability**




LobePro vs. Other Rotary Lobe Pumps

LobePro manufactures a positive displacement, made in America rotary lobe pump with timing gears, helix shaped lobes with a "heart of steel," rebuildable cartridge seals bathed in oil, and adjustable housing segments. We believe this should be your positive displacement pump of choice because of their low life cycle cost. We achieve low life cycle cost by providing ***Better Pumps with Better Support:***

Better Pumps:

Better Lobes:

Our lobes are 4-wing or 6-wing helix shaped with a NBR rubber coating over a textured steel core.

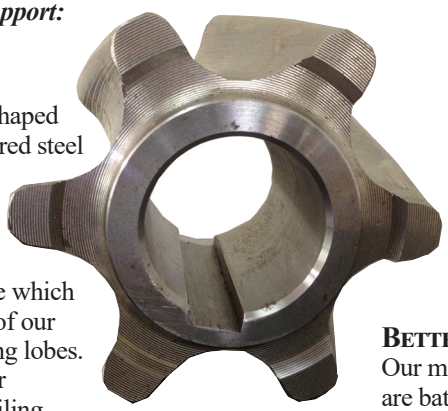

- The 4-wing lobe has four sealing lines which reduces slip and increases efficiency, as compared to the 2 or 3 wing lobe which have 2 and 3 sealing lines. Two of our competitors only offer 2 or 3 wing lobes.
- Our helix lobe produces a near pulseless flow because as the trailing edge of the front wing is finishing pumping, the leading edge of the following wing is starting to pump. Pulsation from these straight 2 or 3 wing lobes caused damage to WWTP piping systems. The pulsation damage was serious enough to cause at least one major wastewater engineering firm to stop specifying rotary lobe pumps altogether until the helix shape was developed.

Better Shafts:

Our shafts are significantly stiffer than most competitors. This is important because shaft deflection can cause the lobes to hit each other and the housing creating bearing, seal and lobe damage. For this reason, we think shafts with step down in the wetend are unacceptable. One major competitor uses stepdown shafts in the wetend. As a result, their wetend shaft sizes for comparable pumps are significantly smaller. See comparison below of LobePro shafts (top) versus one of our leading competitors (bottom).

LobePro's wet end shaft size (in mm)

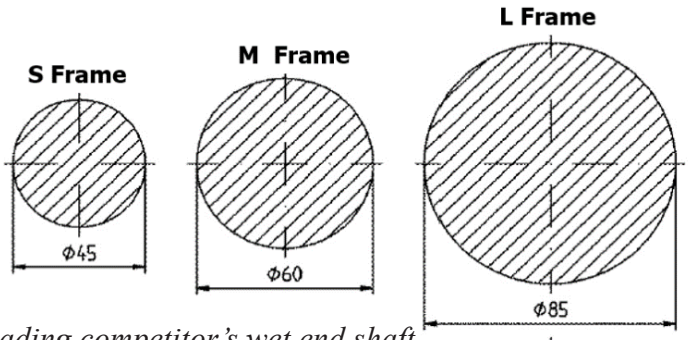

Leading competitor's wet end shaft

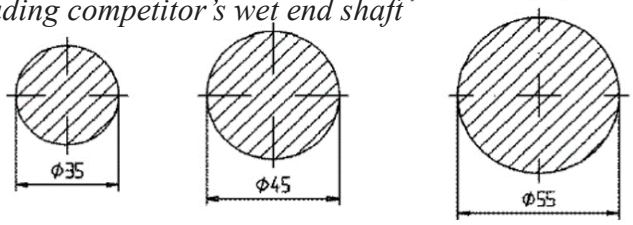

Better Seals:

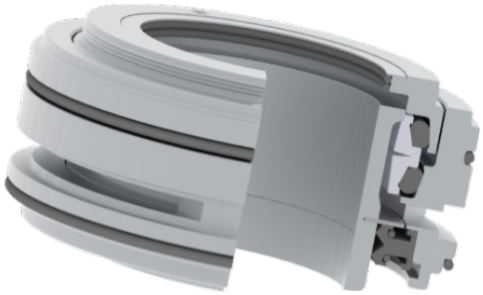

We use a mechanical cartridge type seal that can be rebuilt in place without removing any piping.

- Our patented LARS (LobePro Affordable, Rebuildable Seal) seal can be rebuilt in place quickly and easily, often at just 20-50% of a new cartridge seal's cost. This is in contrast to competitors' cartridge seals which cannot be rebuilt and therefore the entire cartridge must be replaced if the seal fails. One competitor uses component style seals containing approximately 13 pieces. These are difficult for users to install correctly- especially if only done occasionally.

Better Seal Cooling:

Our mechanical seals are housed in the seal cooling chamber where they are bathed in oil thus allowing the pump to run dry for at least 30 minutes. The wet end is separated from the gear housing by the seal cooling chamber and by a double lip seal. The alternative is to have an "air gap" between the wet end and the gear housing. The "air gap" is advertised as an advantage because if the seal leaks it doesn't contaminate the gear housing. That's true, but that means leaks will contaminate the floor and surrounding area instead! If the "air gap" pump runs dry the seals will burn up and fail unless external flushing water is provided. Providing external flushing water for an "air gap" pump is expensive, wasteful and prone to flush water supply interruption problems.

Better Pump Housing:

We provide top and bottom housing segments which are adjustable twice by simply moving locating roll pins in the housing segment, thereby reducing the gap between the lobes and the housing segment caused by wear.

- Some competitors specify a solid cast wetend housing with replaceable radial liners. In abrasive applications, these radial liners are difficult to remove and as a result the piping often needs to be removed in order to get a good grip on the worn fasteners. Because they are thin and flexible they need to be regularly replaced. In contrast, our wastewater customers rarely need replacement housing segments.

- We are able to provide a range of flange sizes for both suction and discharge on our M frame and L frame pumps to meet the owner's requirements. One of our competitor's housing includes integral flanges. The drawback of this is that the flanges cannot be customized to meet your size and shape requirements.

Better Pumps. Better Support.

Better Selection: Our staff works to understand the application and ensure proper selection and recommendations.

Better Support: Our engineers deliver quality drawings and documentation on time.

Better Parts: Our pumps are manufactured in the USA, with most critical components machined at our factory in Brunswick, Georgia.

Better Testing: All equipment is factory tested, ensuring quality and compliance with customer requirements.

Better Delivery: Our staff will work to meet your deadlines and ensure a timely delivery. In addition, we guarantee shipment of standard wear parts within two business days for the first 5 years after the pump purchase.

Better Service: Our goal is your satisfaction; we work closely with our distributors and staff will work tirelessly to resolve any challenges you encounter with your application.

Better Warranty: 2 year warranty on workmanship and materials.

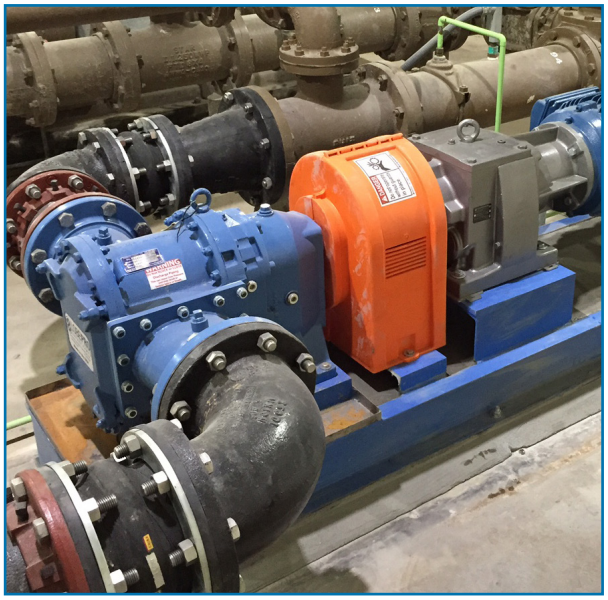

LobePro vs. PC Pumps

LobePro pumps handle the same jobs as well or better than progressive cavity (screw) pumps up to 150 psi of pressure and have the following advantages:

- Require approximately 1/3 their physical space
- Because they are 1/3 the size:
  - Parts are typically 1/3 the cost
  - Maintenance labor time is 1/3 or less
  - Lifetime ownership cost is 1/3
- Ability to run dry for a period of time
- Maintenance in place. LobePro lobes, seals and wear plates can be replaced without removing attached piping or pump.
- No Ragging. The PC Pump's screwing motion causes the pump to clog or rag. LobePro pumps very seldom clog.

> "I love this LobePro Pump. It takes three guys three days to build a PC Pump. It took three hours to rebuild the LobePro - and I did it myself. I can't wait until we replace the other PC Pumps with LobePro."
> --- WWTP Lead Mechanic

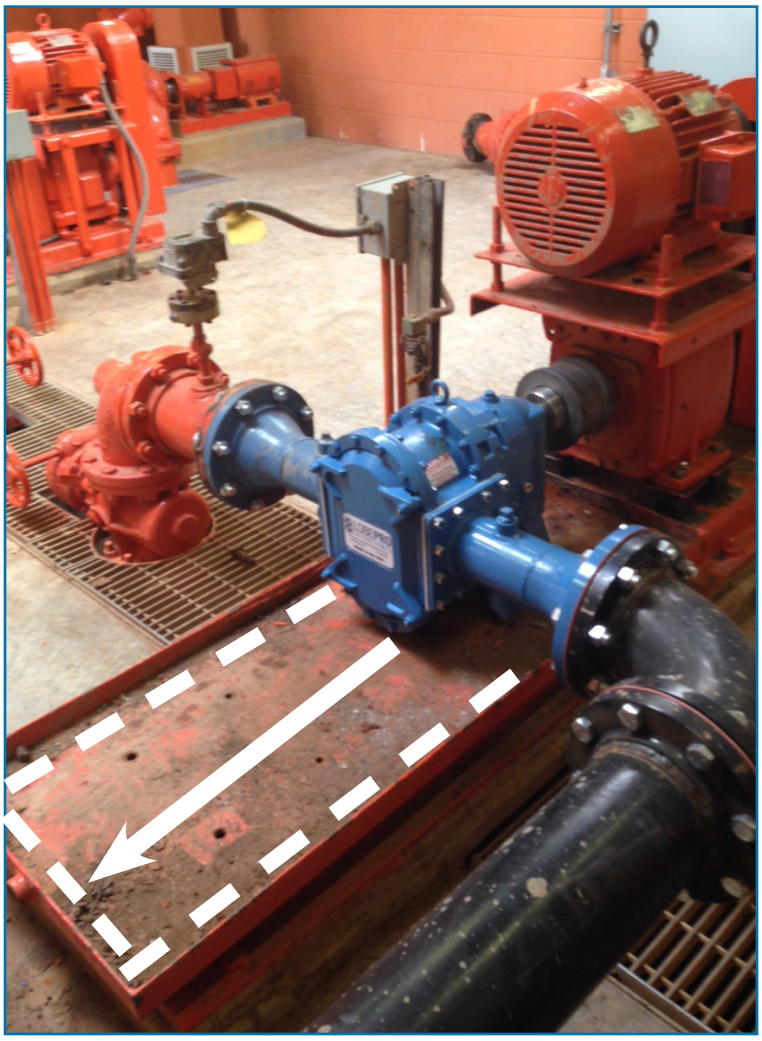

LobePro pump mounted on a progressive cavity pump base. Note the additional space remaining on the base. (Shown with border)




Model / Service	SSp, SSc, SM, SL (Sludge, Mud and Slurries*)	CSp, CSc, CM, CL (Chemical/Corrosive)
Wetted Parts		
Rotary Lobes		
Elastomer	NBR Opt. HNBR, FKM, EPDM or Eng. Rec.	FKM or HNBR Opt. NBR, EPDM or Eng. Rec.
Lobe Profile and Core	Helix / Carbon Steel	Helix / Carbon Steel
# of Lobe Wings	Sp/Sc: 6; M/L: 4	Sp/Sc: 6; M/L: 4
Sealing Elastomers		
Orings and Lip Seals	FKM or Eng. Rec.	FKM or Eng. Rec.
Mechanical Seals		
Mechanical Seal	Duronit Opt. Tungsten Carbide, Silicon Carbide, or Eng. Rec	Silicon Carbide Opt. Tungsten Carbide or Eng. Rec
Seal Holder	Carbon Steel w/ Corrosion resistant coating	Stainless Steel Type 316
Wear Plates	AR500 Steel (Brinell 500)	Duplex Stainless Steel
Housing Segments**	Sc: Carbon Steel; Sp/M/L: ASTM A48 Grey Iron rust primed	Duplex Stainless Steel
Flange Ring	ASTM A36 Carbon Steel	Stainless Steel Type 316L
Bolts	Carbon Steel ISO 898-1	Stainless Steel A2-A4
Pressure Disc	Stainless Steel Type 316	Stainless Steel Type 316
Limited Exposure Parts		
Quench/Seal Cooling Chamber	Sp/Sc: Carbon Steel M/L: ASTM A48 Grey Iron rust primed	Sp/Sc: Carbon Steel M/L: ASTM A48 Grey Iron, PTFE / Ceramic Teflon on wetted faces
Pump Cover	ASTM A48 Grey Iron rust primed	ASTM A48 Grey Iron, Opt. 316 SS
Non-Wetted Parts		
Gears	GMA Class 9 AISI 1045 steel	GMA Class 9 AISI 1045 steel
Gear Housing	Sp/Sc: Carbon Steel or ASTM A48 Grey Iron; M/L: ASTM A48 Grey Iron	Sp/Sc: Carbon Steel or ASTM A48 Grey Iron; M/L: ASTM A48 Grey Iron
Shafts	AISI 4140 Alloy Steel	AISI 4140 Alloy Steel
Painting Requirements		
Standard Painting	SSPC-SP6 Sandblast/Paint, LobePro Blue	SSPC-SP6 Sandblast/Paint, LobePro Silver
Solids Handing		
Max. Soft / Hard Solids	Sp/Sc: 0.75" (19 mm); M: 1.5" (38 mm); L: 2.5" (63 mm) / 1/8" (3 mm)	Sp/Sc: 0.75" (19 mm); M: 1.5" (38 mm); L: 2.5" (63 mm) / 1/8" (3 mm)

NOTE: Listed above are standard pump assemblies; lobe styles and materials subject to recommendation by LobePro Engineering. A wide range of optional materials are available for each model. Consult LobePro for further information. *Consult factory for application temperature above 80°C (175°F) ** ProForm housing segment for Sp-frame pumps incorporates housing segment, flange ring, barrier plate and integral suction and discharge flange fittings in one piece.

Model	Max Capacity	Working Press. (Continuous)	Typical Wastewater Application (50 psi)	
			Output / Flow Rate	Pump Run Speed
S8	72 GPM (16 m³/hr)	175 psi (12.1 bar)	20-30 GPM (4.5-6.8 m³/hr)	360-490 RPM
S16	144 GPM (32 m³/hr)	100 psi (6.9 bar)	40-60 GPM (9.1-13.6 m³/hr)	360-490 RPM
M34	204 GPM (46 m³/hr)	145 psi (10 bar)	80-100 GPM (18.2-22.7 m³/hr)	255-345 RPM
M50	300 GPM (68 m³/hr)	125 psi (8.6 bar)	100-130 GPM (22.7-29.5 m³/hr)	255-345 RPM
M68	408 GPM (92 m³/hr)	100 psi (6.9 bar)	160-200 GPM (36.3-45.4 m³/hr)	255-345 RPM
M100	600 GPM (136 m³/hr)	50 psi (3.4 bar)	200-260 GPM (45.4-59.1 m³/hr)	255-345 RPM
L133 / L133h	665 GPM (151 m³/hr)	125 psi (8.6 bar) / 175 psi (12 bar)	260-300 GPM (59.1-68.1 m³/hr)	215-290 RPM
L266 / L266h	1,330 GPM (302 m³/hr)	75 psi (5.2 bar) / 150 psi (10.3 bar)	520-600 GPM (118.1-136.3 m³/hr)	215-290 RPM
L399 / L399h	1,995 GPM (453 m³/hr)	40 psi (2.8 bar) / 85 psi (5.9 bar)	780-900 GPM (177.1-204.4 m³/hr)	215-290 RPM
L531h	2,660 GPM (605 m³/hr)	70 psi (4.8 bar)	1,040-1,200 GPM (236.2-272.6 m³/hr)	215-290 RPM

CE and Atex approved

LOBEPRO ROTARY PUMPS

LobePro, Inc. UL REGISTERED FIRM ISO 9001-2015 - 10005463 QM15

2610 Sidney Lanier Drive • Brunswick, Georgia 31525
(888) 997-PUMP (7867) Toll Free • (912) 466-0304 Phone • (912) 466-0086 Fax • www.LobePro.com